INFEED DRIVE CONVEYOR ROLLER SPACING 16" BETWEEN CENTERS

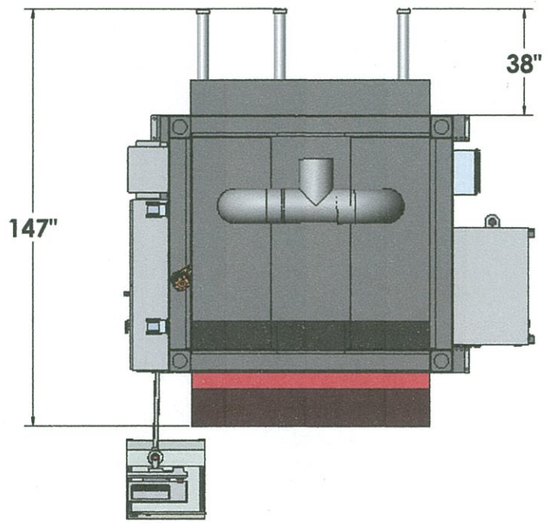

OUTFEED DRIVE CONVEYOR ROLLER SPACING 8" BETWEEN CENTERS

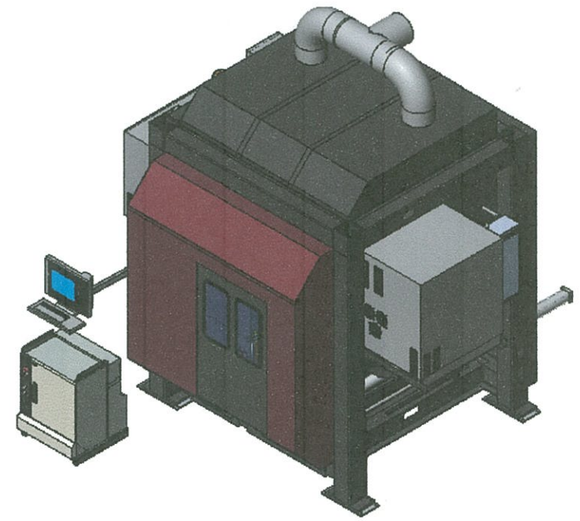

REV.	DATE	DESCRIPTION	BY	IND
REVDATE		REVDESC	REVBY	IND

SYMBOLS FOR GEOMETRIC TOLERANCE

STRAIGHT	CIRC. RUNOUT	TRUE POSITION	MMC	ANGLE
FLAT	TOTAL RUNOUT	CONCENTRIC	LMC	DIA.
ROUND	PERPENDICULAR	PROFILE OF SURFACE	RFS	RAD.
CYLINDER	PARALLEL	PROFILE OF LINE	TOL. ZONE	DATUM

DIMENSIONAL TOLERANCES, UNLESS OTHERWISE SPECIFIED

X/Y = ± 1/16 X° = ± 1°
X.XX = ± 0.01 X.X° = ± 0.1°
X.XXX = ± 0.005
X.XXXX = ± 0.0005 STD. TWIST DRILL ⊕ ±0.005
(X/Y) = REFERENCE DIMENSIONS CARRY IMPLIED TOLERANCE OF MATERIAL SPECIFIED

SURFACE 64 — WELD ALL AROUND WELD SIZE EQUALS THICKNESS OF THINNEST PIECE

DO NOT SCALE DRAWING | NO MANUAL CHANGES

THIRD ANGLE PROJECTION

DIMENSIONS SHOWN IN BRACKETS ARE FOR REFERENCE ONLY (X.XX)

ALL RIGHTS RESERVED
THIS DRAWING AND THE INFORMATION CONTAINED THEREIN IS CONFIDENTIAL AND THE PROPERTY OF BURLINGTON AUTOMATION. NO USE OF, OR DISCLOSURE OF THIS DRAWING OR THE INFORMATION CONTAINED THEREIN SHALL BE MADE WITHOUT THE WRITTEN PERMISSION OF BURLINGTON AUTOMATION CORPORATION

BURLINGTON AUTOMATION CORPORATION
63 INNOVATION DRIVE
HAMILTON, ONTARIO CANADA L9H 7L8
TEL: (905) 689-7771 FAX: (905) 689-7772

BURLINGTON AUTOMATION — Pythonx

MATERIAL: AS NOTED			CUSTOMER
DRAWN: GP	DATE: MARCH 2015	ENG'R: GP	PYTHONX-2 PLASMA SYSTEM ROBOT STRUCTURE ROBOT STRUCTURE ASSEMBLY -
DRAWING FILE NAME: A4800BB-018			
DRAWING SCALE: 1:32		WORK ORDER: -	
TOTAL QTY.: 0	QUANTITY EACH SUB-ASSEMBLY: 0	DRAWING NUMBER: A4800BB-018	REV.: 0